FEMALE END VIEW	SUGGESTED PANEL CUT OUT
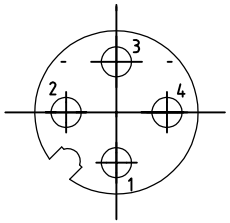	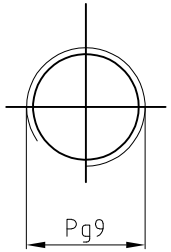

SPECIFICATIONS	
CONTANCT CARRIER MATERIAL/COLOR	TPU/BLACK
CONTACT/PLATING	BRASS/GOLD
HOUSING MATERIAL/PLATING	BRASS/NICKEL
O-RING MATERIAL	FKM/NBR
OPERATING CURRENT	4 A
OPERATING VOLTAGE	250 V
CONDUCTOR CROSS SECTION(AWG)	22 AWG
OPERATING TEMPERATURE	-20°C — +105°C
PROTECTION CLASS	IEC IP67

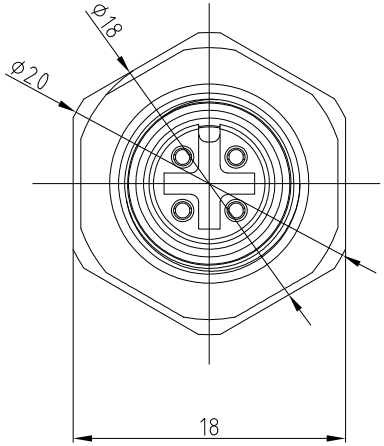

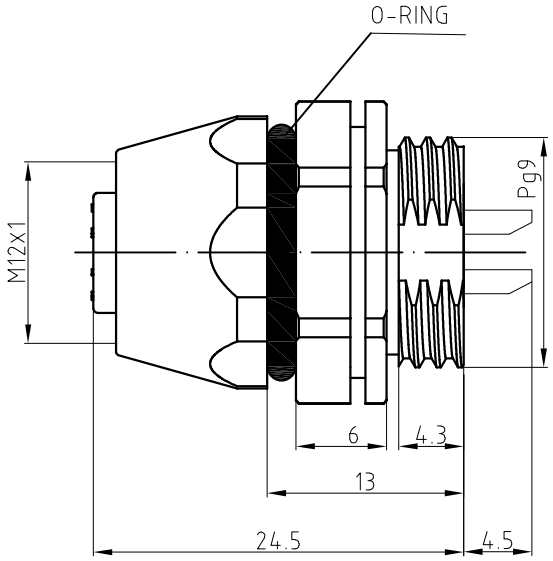

REV	COUNT	DESCRIPTION OF REVISIONS	BY	CHECKED	DATE

UNIT OF MEASUREMENT MILLIMETER	Tianjin Geneuo Technology Co.,Ltd		
Approved: Date:	Date: 2018.4.27	Description: FEK32-L	
Process:YJ F Date:2018.5.24	Scale: 1:1		
Checked:WY Date:2018.5.3	3RD Angle Projection	www.gsee-tech.cn www.gsee-tech.com	REV A
Designed:LXH Date:2018.4.27		SOURCE DRAWING-FOR REFERENCE ONLY	